BOBRICK

Technical Data

SURFACE-MOUNTED TOILET-SEAT-COVER DISPENSER

B-221

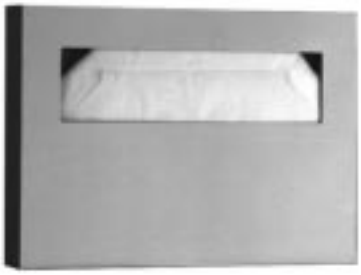

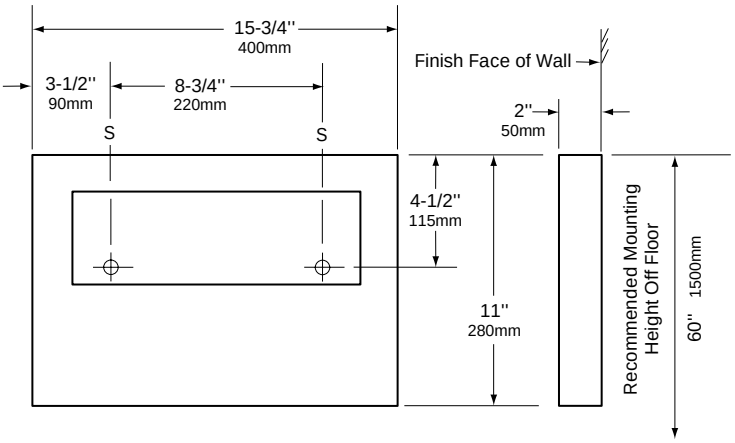

MATERIALS:

18-8 S, type-304, 22-gauge (0.8mm) stainless steel with satin finish. All-welded construction.

OPERATION:

Dispenses single- or half-fold paper toilet seat covers. Dispenser fills from bottom through concealed opening. Capacity: 250 toilet seat covers.

INSTALLATION:

Mount unit on wall or toilet partition with two flat-head screws, furnished by manufacturer, at points indicated by an *S*. For plaster or dry wall construction, provide concealed backing that complies with local building codes, then secure unit with flat-head screws furnished. For other wall surfaces, provide fiber plugs or expansion shields for use with screws furnished, or provide 1/8" (3mm) toggle bolts or expansion bolts.

Note: Provide a 2" (51mm) minimum clearance from bottom of dispenser to top of any horizontal projection to provide room for filling dispenser from bottom.

SPECIFICATION:

Surface-mounted toilet-seat-cover dispenser shall be type-304, 22-gauge (0.8mm) stainless steel with all-welded construction; exposed surfaces shall have satin finish. Dispenser shall have a concealed opening in bottom for filling. Capacity shall be 250 paper toilet seat covers. Manufacturer's service and parts manual shall be provided to the building owner/manager upon completion of project.

Surface-Mounted Toilet-Seat-Cover Dispenser shall be Model B-221 of Bobrick Washroom Equipment, Inc., Clifton Park, New York; Jackson, Tennessee; Los Angeles, California; Bobrick Washroom Equipment of Canada Ltd., Scarborough, Ontario; Bobrick Washroom Equipment Pty. Ltd., Australia; and Bobrick Washroom Equipment Limited, United Kingdom.

The illustrations and descriptions herein are applicable to production as of the date of this Technical Data Sheet.
The manufacturer reserves the right to, and does from time to time, make changes and improvements in designs and dimensions.

Revised 5/98 Printed in U.S.A.

© 1998 by Bobrick Washroom Equipment, Inc.